Ourexam

Higher Quality Better Service!

We offer free update service for one year

Http://www.ourexam.com

Exam : **050-664-(575b)**

Title : Novell Edirectory Design and Implementation

Version : DEMO

1. What does the following WAN Traffic Manager policy control? TCPIP, NA

A. Prevents background traffic generated by TCP/IP

B. Prevents background traffic unless the traffic is generated by TCP/IP

C. Restricts TCP/IP traffic unless the traffic is in the same TCP/IP network area

D. Restricts TCP/IP traffic unless the traffic comes from a different TCP/IP network area

Answer: B

2. You are the network administrator for your company and are in charge of your company's eDirectory design and implementation project. You have completed the project approach phase of the eDirectory design cycle. Which tasks still need to be completed before you begin the implementation phase? (Choose 2.)

A. Design the eDirectory tree

B. Fine-tune the eDirectory design

C. Determine accessibility needs

D. Plan a time synchronization strategy

E. Gather business information related to network design

Answer: AC

3. After you create object naming standards, what should be defined for the attribute standards? (Choose 2.)

A. Which object types require attributes

B. Whether the attribute of an object is required

C. Whether the attribute of an object is purgeable

D. Whether the attribute of an object is unique from other object attributes

E. Whether the attribute of an object is a system attribute that is automatically populated by eDirectory

Answer: BE

4. Your company has 15 sites connected by a WAN link to corporate headquarters. Corporate headquarters has 50 servers and each of the 15 sites has 30 servers. You are implementing a multiple time provider group time synchronization strategy. Which are considerations you should make before implementing this strategy? (Choose 2.)

A. If possible, create local time providers.

B. There will be a single point of failure at each location.

C. You cannot exceed 7 primary time servers in your network.

D. Make sure each reference server will synchronize with the same external source.

E. The single reference time synchronization strategy will provide a better strategy for this network structure.

Answer: AD

5. Which DNS/DHCP object contains resource record sets for DNS root servers?

A. DNS Zone object

B. DNS Group object

C. DNS Locator object

D. DNS Name Server object

E. RootSrvrInfo Zone object

Answer: E

6. What does WAN Traffic Manager control? (Choose 2.)

A. Events initiated by administrators or users

B. Server-to-server traffic generated by eDirectory

C. Server-to-server traffic generated by time synchronization

D. The amount of eDirectory traffic based on cost of traffic and time of day

E. Which servers the master replica server synchronizes to by using configured lists

Answer: BD

7. Which statement is true of queue-based printing?

A. The print server object must be associated with a volume object.

B. The printer object must be associated with a print server object.

C. The print queue object must be associated with a print server object.

D. The print server, print queue, and printer objects must all reside in the same container.

E. The print server, print queue, and printer objects must all reside in the same container as the corresponding server object.

Answer: B

8. You have completed a tree merge and want to confirm the new tree name by ensuring that all servers in the tree are configured to support the new tree. Which utility will provide you the status of every server in the tree and the name of the tree it is servicing?

A. DSMAINT

B. DSMERGE

C. DSREPAIR

D. ConsoleOne

E. NDS Manager

Answer: B

9. Which replica or replicas contain a complete copy of all object information of a partition?

A. Master

B. Master and filtered

C. Master and read/only

D. Master and read/write

E. Master,read/write, and read-only

F. Master, read/write, and filtered

G. Master, read/write, read-only, and subordinate reference

Answer: E

10. A secondary server is not synchronized with a single reference time server. During the next polling process, what percent of the time difference does the secondary time server adjust?

A. 0%

B. 16%

C. 25%

D. 50%

E. 75%

F. 100%

Answer: F

11. You are getting ready to merge 2 eDirectory trees. What should be done before attempting to merge trees? (Choose 2.)

A. Back up both eDirectory trees.

B. Rename the Admin user object in the target tree.

C. Remove the source server from all replica rings.

D. Use DSREPAIR to update the schema so it is the same on both servers.

E. Rename the first level container objects in both trees to be identical.

Answer: AD

12. In which file do you configure time on a Linux server?

A. ntp.conf

B. init.conf

C. time.conf

D. tsync.conf

E. clock.conf

Answer: A

13. What does DSMERGE allow you to do?

A. Create replicas

B. Create partitions

C. Rename the eDirectory tree

D. Configure time synchronization

E. Rename objects within the eDirectory tree

Answer: C

14. You are implementing an NDPS printing environment. Where is it recommended to place the NDPS print manager object in the eDirectory tree?

A. Next to user objects

B. Next to the NDPS printer object

C. In the same container where the server object resides

D. At least one level higher than the printers it manages

E. In the same container as the user object that has administrative rights to manage it

Answer: D

15. Examine the exhibit by clicking the Exhibit button.

Server	[Root]	Engineering	Marketing	Testing	PR
Serv1	Master	Master	Master	Master	Master
Serv2	R/W	R/W			
Serv3			R/W		
Serv4		R/W			
Serv5	R/W		R/W		
Serv6	R/W	R/W	R/W		

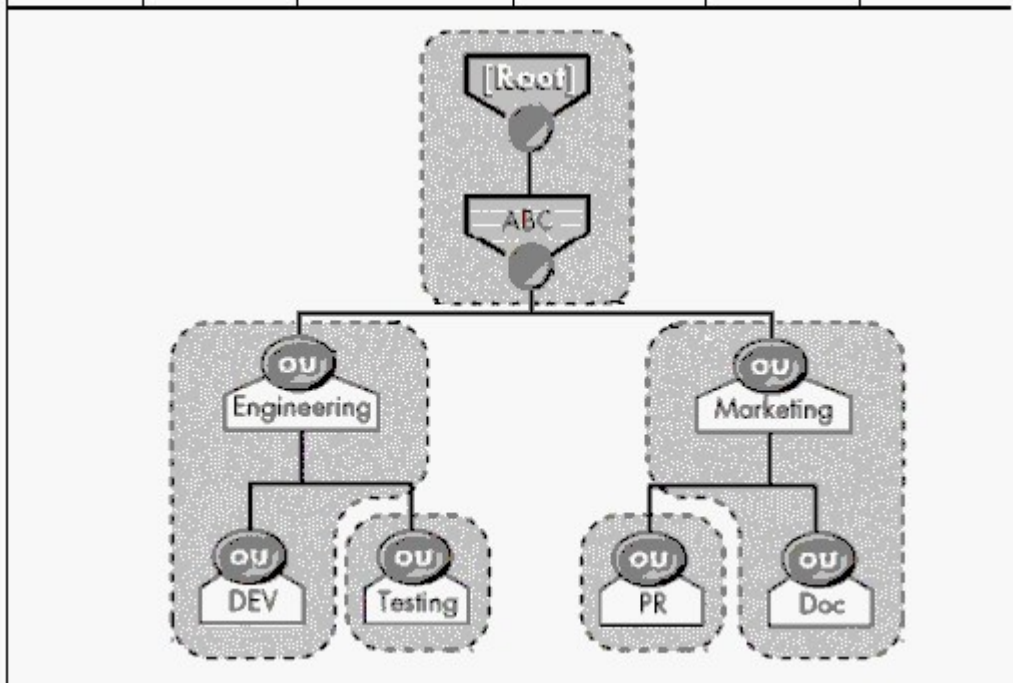

Shown in the exhibit is a partition and replica table, and a partitioned eDirectory tree. Which servers automatically receive a subordinate reference of the PR partition?

A. Serv2, Serv5, and Serv6

B. Serv2, Serv4, and Serv6

C. Serv3, Serv5, and Serv6

D. Serv2, Serv3, Serv5, and Serv6

E. Serv2, Serv3, Serv4, Serv5, and Serv6

Answer: C

16. You have just finished executing a tree merge. Which tasks are left to complete the tree merge process? (Choose 2.)

A. Correct bindery services commands.

B. Update workstation configurations.

C. Delete and re-create volume objects.

D. Restore the taped backup of the file system.

E. Verify trustee assignments to the file system.

Answer: AB

17. You have just created an eDirectory tree and installed 3 servers into the tree. The tree has one partition. Server1, Server2, and Server3 were installed into the Corp container. Server2 crashed and you removed it from the tree before you installed additional servers. The additional servers installed in the tree were Server4, Server5, Server6, and Server7. Server4 and Server5 were installed into the Prod container. Server6 and Server7 were installed into the Acct container. The Corp, Prod, and Acct containers are children of the tree root. The servers were placed in the tree in the following order: Server4, Server5, Server6, Server7. You haven't had the chance to manually add replicas to any server. Which servers hold replicas?

A. Server1 and Server3

B. Server1, Server3, and Server4

C. Server1, Server3, Server4, and Server6

D. Server1, Server3, Server4, and Server5

E. Server1, Server3, Server6, and Server7

F. Server1, Server3, Server4, Server5, Server6, and Server7

Answer: B

18. What is a good recommendation to follow when designing partitions for lower layers in the tree?

A. Create a partition for each container.

B. Partition the Directory by function regardless of location.

C. Use organizational divisions and workgroups to define lower-level partitions.

D. Place all servers, including servers at different locations, in the same partition.

E. Partition the Directory with more partitions at the top and fewer partitions at lower-levels.

Answer: C

19. In which eDirectory objects do WAN traffic policies reside? (Choose 2.)

A. The Admin object

B. The Server object

C. The LAN Area object

D. Any container object

E. The partition root object

Answer: BC

20. Begin by clicking the Exhibit button.

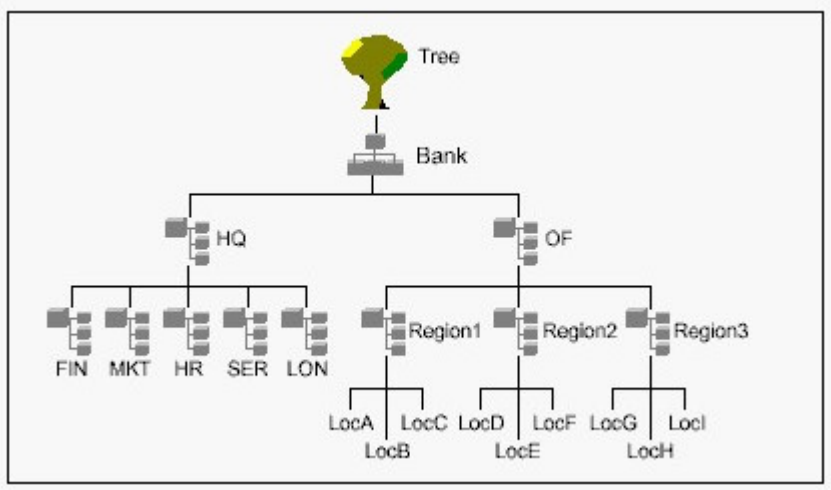

Which eDirectory tree upper-layer design does the graph indicate?

A. Region-based design

B. Function-based design

C. Location-based design

D. Organization-based design

E. Combination approach design

Answer: E