Ourexam

Higher Quality Better Service!

We offer free update service for one year

Http://www.ourexam.com

Exam : **C2180-183**

Title : IBM WebSphere Mesage Broker V7.0, Solution Development

Version : DEMO

1.View the Exhibit:

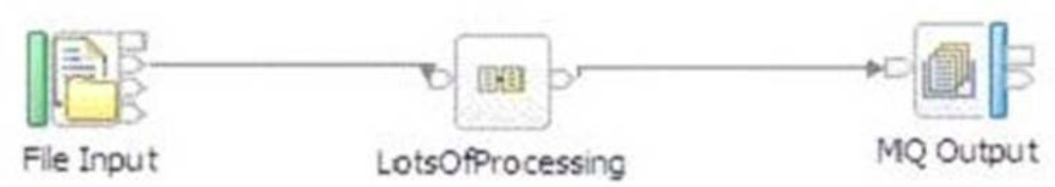

The above flow processes a large incoming file line by line once every four hours.Performance is unsatisfactory even though the server has spare memory and unused processors.Configuring additional instances does not improve this.The following pair of flows was suggested by an architect.The first flow will slice the incoming file into messages without any further processing, which is to be done by the second flow.

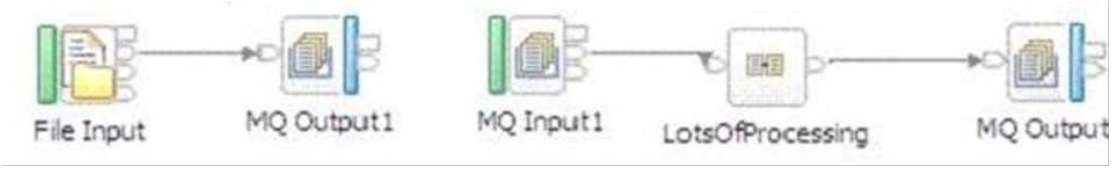

What is the expected outcome if the second flow is configured with a large number of additional instances?

A.Throughput will improve somewhat.Message sequence will not be affected.

B.Throughput will be unaffecte

D.Message sequence will most likely be affected.

C.Throughput will improve significantly.Message sequence will most likely be affected.

D.Throughput will deteriorate slightly due to the extra queuing.Message sequence will not be affected.

Answer: C

2.As part of an Order Process flow, a developer must add a new section to an existing XML message.The relevant section of the incoming message is as follows:

```
<OrderMsg>
      <OrderItem>
            <Number>111</Number>
      </OrderItem>
      <OrderItem>
            <Number>222</Number>
      </OrderItem>
      <OrderItem>
            <Number>444</Number>
      </OrderItem>
</OrderMsg>
```

The developer must add the following Order Item, to fall in the correct numeric sequence: <OrderItem> <Number>333</Number> </OrderItem> How would the developer achieve this?

A.DECLARE FieldRef REFERENCE TO OutputRoot; CREATE FIELD OutputRoot.XMLNSC.OrderMsg.OrderItem[3].Number AS FieldRef; SET FieldRef = '333';

B.DECLARE FieldRef REFERENCE TO OutputRoot.XMLNSC.OrderMsg.OrderItem[2]; CREATE NEXTCHILD OF FieldRef NAME 'Number'; SET FieldRef = '333';

C.DECLARE FieldRef REFERENCE TO OutputRoot.XMLNSC.OrderMsg.OrderItem[2]; CREATE NEXTSIBLING OF FieldRef NAME 'OrderItem'; SET FieldRef.Number = '333';

D.DECLARE FieldRef REFERENCE TO OutputRoot.XMLNSC.OrderMsg.OrderItem[2]; CREATE NEXTSIBLING OF FieldRef AS FieldRef NAME 'OrderItem'; SET FieldRef.Number = '333';

Answer: D

3.Consider the following ESQL code snippet from a Compute node.

```
DECLARE myRef REFERENCE TO InputRoot.XMLNSC.DetailedMsg.Body.Player[3];
MOVE myRef NEXTSIBLING;
SET OutputRoot.XMLNSC.Winner.Name = myRef.Name;
```

The following input message is passed to the Compute node.

```
<DetailedMsg>
    <Header>
        <Date>'10-03-2010'</Date>
        <Type>Register</Type>
        <Id>0010031983</Id>
    </Header>
    <Body>
        <Player>
            <Name>Robert</Name>
            <Age>45</Age>
        </Player>
        <Player>
            <Name>Smith</Name>
            <Age>50</Age>
        </Player>
        <Player>
            <Name>Rocky</Name>
            <Age>45</Age>
        </Player>
    </Body>
</DetailedMsg>
```

What is the value of OutputRoot.XMLNSC?

A.NULL

B.<Winner/>

C.<Winner Name="Robert"/>

D.<Winner><Name>Rocky</Name></Winner>

Answer: D

4.A developer needs to generate a monotonically increasing sequence number for each message in a given message flow.What is the MOST efficient way to achieve this?

A.Use the Create Sequence operator of ESQL.

B.Use the Generate Sequence operator of Java.

C.Use the Sequence function of an external database.

D.Use the Sequence node of WebSphere Message Broker.

Answer: D

5.A message flow reads a file, record by record.Based on the content of each record, it will be propagated to one or more output queues.The File Input node has the Transaction property set to yes and all output nodes are configured to be Automatic node has the transaction property set to yes and all output nodes are configured to be automatic In the event that flow execution is interrupted by a hardware failure, which one of the following is true?

A.Processing will resume at the beginning of the file; previously created messages will be duplicated.

B.Processing will resume at the beginning of the file; previously created messages will be backed out.

C.Processing of the file resumes at the last checkpoint; any extraneous messages will have been rolled

back.

D.The file will be deleted or archived depending on the setting of the File Input node; unprocessed records will be missing from the output.

Answer: A

6.A customer needs to dynamically choose which web service URL to call from a WSDL in the WebSphere Service Registry and Repository (WSRR), based on a company acronym in the input message received by Message Broker.Which node should the solution developer choose when implementing this type of retrieval operation?

A.EndpointLookup

B.RegistryLookup

C.EndpointRetrieval

D.DatabaseRetrieval

Answer: A

7.A company has decided to use WebSphere Message Broker to integrate several legacy systems which generate batch files into the company WebSphere MQ backbone.What is the quickest way the developers can accomplish this task?

A.Build a user defined node.

B.Create a user defined extension.

C.Create a program that processes the batch files into WebSphere MQ messages and then send the messages to WebSphere Message Broker for processing.

D.Use the Record Distribution to WebSphere MQ one-way built-in pattern.

Answer: D

8.When a message is received by an Input node in a message flow, the message assembly is created.Which tree or trees are populated when an error free message is received by a FileInput node?

A.The Message tree only.

B.The Message tree and Environment tree.

C.The Message tree and LocalEnvironment tree.

D.The Message tree, Environment tree, LocalEnvironment tree, and ExceptionList tree.

Answer: C

9.Which Message Broker artifact type is not analyzed by Impact Analysis?

A..esql

B..mset

C..msgmap

D..msgflow

Answer: B

10.A developer has a message flow that consists of an MQInput node, Compute node and MQOutput node.The message is parsed by the XMLNSC domain.The Compute node will extract the name and age of each player, then send them onto the register players application to have the team registered.The input message that the Compute node will be processing is shown below.

```
<DetailedMsg>
        <Header>
                <Date>'10-03-2010'</Date>
                <Type>Register</Type>
                <Id>0010031983</Id>
        </Header>
        <Body>
                <Organization>IBM</Organization>
                <Player>
                        <Name>Robert</Name>
                        <Age>45</Age>
                </Player>
                <Player>
                        <Name>Smith</Name>
                        <Age>50</Age>
                </Player>
                <Player>
                        <Name>Rocky</Name>
                        <Age>45</Age>
                </Player>
        </Body>
</DetailedMsg>
```

What MUST be done to access the information from the first player?

A.Set OutputRoot.XMLNSC.RegPlayer.Player[NextCount] = InputBody.Body.Player[1]

B.Set OutputRoot.XMLNSC.RegPlayer.Player[NextCount] = InputBody.DetailedMsg.Body.Player[1]

C.Set OutputRoot.XMLNSC.RegPlayer.Player[NextCount] = InputRoot.DetailedMsg.Body.Player[0]C.Set OutputRoot.XMLNSC.RegPlayer.Player[NextCount] = InputRoot.DetailedMsg.Body.Player[0]

D.Set OutputRoot.XMLNSC.RegPlayer.Player[NextCount] = InputRoot.DetailedMsg.Body.Player[1]D.Set OutputRoot.XMLNSC.RegPlayer.Player[NextCount] = InputRoot.DetailedMsg.Body.Player[1]

Answer: B

11.A developer is tasked with designing a message flow, utilizing an XSLTransform node.Which location is searched first by the broker, to determine the name of the style sheet to use?

A.The LocalEnvironment.

B.The BAR file overrides.

C.The XSLTransform node properties.

D.Inside the message XML data.

Answer: D

12.A solution developer needs to help a software company to decide whether to use HTTP nodes or SOAP nodes in developing web services.Which of the following benefits would the solution developer use in support of SOAP nodes over HTTP nodes?

A.Support for a broker wide listener.

B.Support for runtime validation against WSDL.

C.Support for other web service standards, like REST and XML-RPC.

D.Support for external Web servlet container to provide listener support for a larger number of concurrent sessions.E.Automatic processing of Message Transmission Optimization Mechanism (MTOM).

Answer: B,E

13.In a message flow, a developer needs to enrich an employee's record with information from a database.Consider this input message.

```
<Employee>
        <Number>12345</Number>
</Employee>
```

Which of the ESQL statements in the response options will produce the following output message?

```
<Employee>
        <Number>12345</Number>
        <Name>John Smith</Name>
</Employee>
```

A.SET OutputRoot.XMLNSC.Employee.Name[] = (SELECT ITEM E.EmpName from Database.Employee as E where E.EmpNumber = InputBody.Employee.Number);

B.SET OutputRoot.XMLNSC.Employee.Name[] = (SELECT E.EmpName AS Name from Database.Employee as E where E.EmpNumber = InputBody.Employee.Number);

C.SET OutputRoot.XMLNSC.Employee = THE(SELECT E.EmpName from Database.Employee as E where E.EmpNumber = InputBody.Employee.Number);
D.SET OutputRoot.XMLNSC.Employee = THE(SELECT ITEM E.EmpName AS Name from Database.Employee as E where E.EmpNumber = InputBody.Employee.Number);
Answer: A

14.A large company needs to interface their legacy application with a newly acquired Enterprise Information System (EIS) application called Siebel CRM.Which transport service will the developer use to discover metadata and send requests to the EIS system?
A.MQ Link for R3
B.WebSphere Broker Adapters
C.WebSphere Broker File Transport
D.WebSphere Business Integration Adapter
Answer: B

15.Which one of the following advantages does the Enterprise Service Bus deliver over traditional point-to-point solutions?
A.Scalability
B.Adaptability
C.Redundancy
D.Performance
Answer: B

16.Consider the following two implementations of a request/response pattern.1) Asynchronous with a separate flow for the response logic using an MQInput node

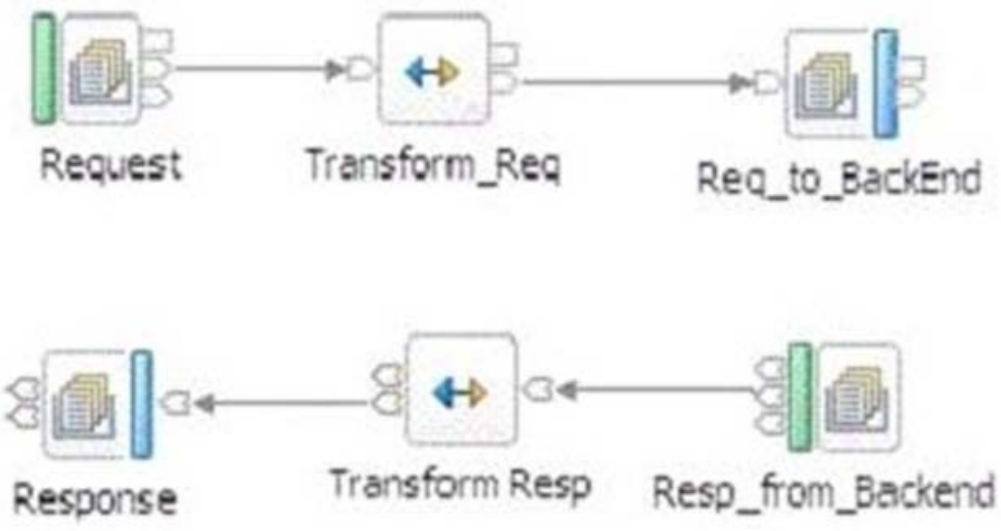

2) Synchronous, completing the round trip in the same flow pulling the response message with an MQGet

node

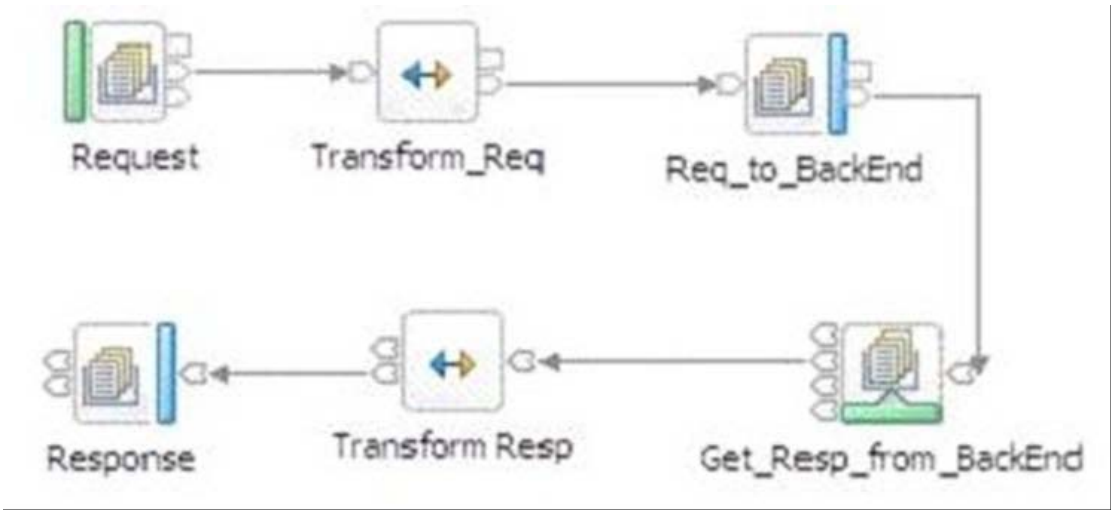

Which of the following is FALSE?

A.Multiple flow instances will not help throughput in either implementation.

B.The synchronous implementation will require more memory, especially in scenarios with large messages and high throughput requirements.

C.Given sufficient resources, the synchronous implementation will perform better in cases where large amounts of data (i^tate? need to be preserved across the back end call.

D.If run in a single instance, the synchronous implementation can be used to preserve message sequence, whereas the asynchronous imDlementation cannot be assumed to do the same.

Answer: A

17.A developer needs to call a request/response web service from a message flow.Knowing response messages may not arrive in the same order as the requests, what set of processing nodes will automatically set the required WS-Addressing standard that assures message correlation?

A.SOAPInput and SOAPReply

B.SOAPExtract and SOAPReply

C.SOAPRequest and SOAPReply

D.SOAPAsyncRequest and SOAPAsyncResponse

Answer: D

18.The following flow processes data from an input queue and builds a file.A Timeout Notification node has been configured to send a message to the Finish File's terminal of the File Output node once every hour.As a result, a file named hourly Record Collection.dat will be written to theFinish File terminal of the File Output node once every hour.As a result, a file named hourly Record Collection.dat?will be written to the designated destination directory.

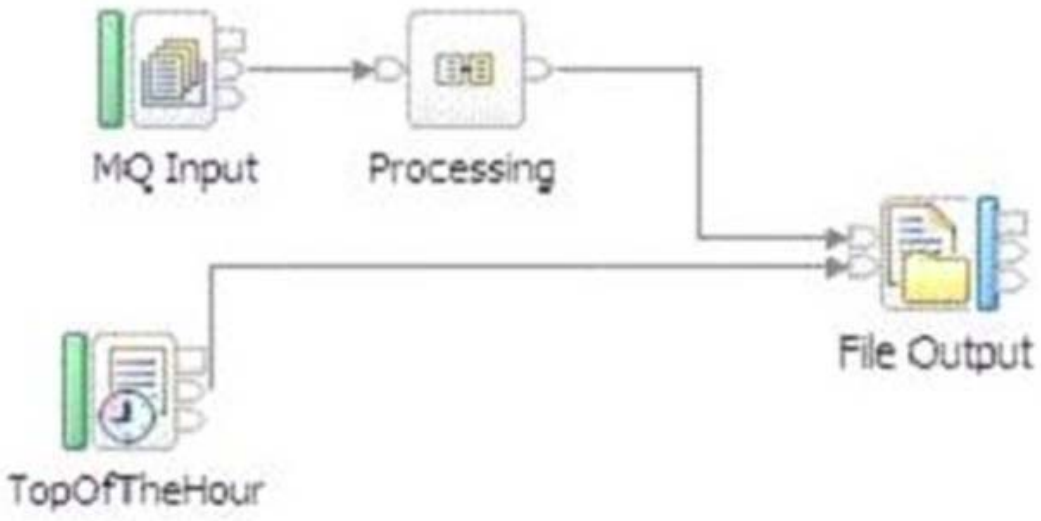

It is expected the previous file will be removed before the next file is written in its place.If this has not happened, what are the options available to the solution developer on the File Output node?

A.Overwrite (replace) the old file or append to the old file.

B.Overwrite (replace) the old file or rename the old file in place by adding a timestamp or throw an exception.

C.Overwrite (replace) the old file or archive the old file with or without a time stamp appended to the file name or throw an exception.

D.Overwrite (replace) the old file or append to the old file or archive the old file (with or without a time stamp appended to the file name.)

Answer: C

19.The solution developer has been informed by the SAP team that the userid and password for the SAP test environment needs to be replace

D.What is the EASIEST way to reconfigure userid and password for an SAP EIS adapter?

A.Modify the deployment descriptor in the affected bar files and redeploy them to all required locations.

B.Use the following command against the affected broker(s): mqsisetdbparms <brokername> -n eis::<adaptername> -u <username> -p <password>

C.Use the following command against the affected broker(s): mqsichangeproperties <brokername> -c eis::<adaptername> -o SAP -u <username> -p <password>

D.Rerun the Adapter Connection Wizard for the component, enter the updated values and redeploy the component to all required locations.

Answer: B

20.A developer needs to create an asynchronous messaging application to connect to a third party which uses a programming interface known as Message Queue Interface (MQI).Which transport protocol should the developer use?

A.MQ

B.FTP

C.JMS

D.XMS

Answer: A