Ourexam

Higher Quality Better Service!

We offer free update service for one year

Http://www.ourexam.com

Exam : **TB0-115**

Title : TIBCO ActiveMatrix Service-Oriented Architecture Exam

Version : Demo

1.What are two functions of a TIBCO ActiveMatrix BusinessWorks Critical Section Group? (Choose two.)
A. controls concurrent accesses to shared resources
B. escalates the execution priority of the grouped activities
C. isolates resource-intensive activities for performance tuning
D. synchronizes process instances so that only one executes the grouped activities at a time
Answer: A,D

2.As a TIBCO recommended best practice, what is the preferred method for indicating backwards-compatible changes to a service?
A. update the point release number in the WSDL filename
B. update the major release number in the WSDL filename
C. update the point release number in the WSDL namespace name
D. update the major release number in the WSDL namespace name
Answer: A

3.Which of the following statements are true? (Choose two.)
A. Fine-grained services are best suited for user interactions
B. Coarse-grained services are best suited for system-to-system interactions
C. Fine-grained services are suitable for both user and system-to-system interactions
D. Coarse-grained services are suitable for both user and system-to-system interactions
Answer: A,B

4.Which two of the following should be considered when specifying a service? (Choose two.)
A. The rate at which the service will be invoked
B. The platform on which the service will be deployed
C. The information passed as parameters to the service
D. The platform from which the service will be accessed
Answer: B,D

5.What is the primary purpose of a service specification?
A. to ensure that the service appropriately utilizes other services
B. to ensure that the resulting service is suitable for its intended uses
C. to ensure that the design of the service follows established best practices
D. to ensure that the service can be built within the given cost and schedule guidelines
Answer: B

6.Which of the following is the most appropriate structure for naming service operations?
A. <IndustryName>.<ServiceName>.<OperationName>
B. <CompanyName>.<LineOfBusiness>.<FunctionalArea>.<OperatonName>
C. <CompanyName>.<DivisionName>.<ApplicationName>.<OperationName>
D.<IndustryName>.<CompanyName>.<LineOfBusiness>.<ApplicationName>.<OperationName>
Answer: D

7.What are three characteristics of service virtualization? (Choose three.)

A. The service provider can be one of several providers.
B. The application decides which service implementation to use.
C. It decouples the service transport from its business implementation.
D. It allows the service to be load balanced and fault tolerant in a transparent manner to service consumers.
Answer: A,C,D

8.Service X is available 80% of the time, and Service Y is available 90% of the time. Service Z calls Services X and Y. What is the highest expected availability for Service Z?
A. 72%
B. 80%
C. 8%
D. 90%
Answer: A

9.When creating a TIBCO ActiveMatrix environment to support the deployment of SOA solutions by multiple business units, which two components are optional? (Choose two.)
A. a database
B. TIBCOActiveMatrix Policy Manager
C. TIBCO Enterprise Message Service
D. TIBCOActiveMatrix Lifecycle Governance Framework
Answer: B,D

10.A global trading firm is kick-starting its SOA initiative with a pilot project implementing an enterprise trading platform. The platform requires integrating multiple frontend .NET applications at its New York business unit (with its own data center) with multiple Java-based backend applications developed/managed by its Hong Kong business unit (with its own data center). The SOA Competency Center team is working with the Enterprise Architecture team to decide how to deploy the TIBCO ActiveMatrix Service Grid to best enable the implementation. What would be a recommended approach to setting up ActiveMatrix Service Grid for the firm?
A. The information provided is insufficient to determine a solution.
B. set up oneActiveMatrix cluster at each site, and use standard SOAP/HTTPS or SOAP/JMS to integrate the two sites
C. since most clients are based in the U.S., use the TIBCOActiveMatrix cluster at the U.S. site to set up a single worldwide ActiveMatrix Service
Grid, with environments spanning the U.S. and Hong Kong sites
D. since most backend systems are in Hong Kong, use the TIBCOActiveMatrix cluster at the Hong Kong site to set up a single worldwide
ActiveMatrixService Grid, with environments spanning the U.S. and Hong Kong sites
Answer: B

11.What are two characteristics of a service? (Choose two.)
A. A service provides a set of operations that can be used in multiple contexts.
B. Services use WSIL, an XML format for defining the IP address and port of a service.

C. Services use WSDL, an XSD format for describing network services as a set of endpoints.
D. The operation interfaces of a service isolate the consumer from the implementation details of the service provider.
Answer: A,D

12.When is it appropriate to use a compensating transaction?
A. when one of the participants is incapable of performing a compensating transaction and that participant is last in the transaction
B. when one of the participants is incapable of performing a compensating transaction and that participant is first in the transaction
C. when multiple participants are each incapable of performing a compensating transaction and each participant is not separated by any stateless activities
D. when multiple participants are each incapable of performing a compensating transaction and each participant is separated by at least one stateless activity
Answer: A

13.A bank built a DebitAccount Service and a CreditAccount Service, both exposed as standard Web Services (SOAP/HTTPS) in the enterprise. The bank now wants to build a FundTransfer Service that debits an input amount from one account and credits it to another account. The FundTransfer Service must be able to throw and handle all errors as SOAP Faults. Which two TIBCO ActiveMatrix products are capable of enabling the implementation of this FundTransfer Service? (Choose two.)
A. TIBCOActiveMatrix Service Grid
B. TIBCOActiveMatrix Policy Manager
C. TIBCOActiveMatrix BusinessWorks
D. TIBCOActiveMatrix Service Performance Manager
Answer: A,C

14.Which three artifact types are default options when requesting service consumption in the TIBCO ActiveMatrix Lifecycle Governance Framework? (Choose three.)
A. the operations to be consumed
B. the application consuming the service
C. the organizational unit of the provider of the service
D. the organizational unit of the consumer of the service
Answer: A,B,D

15.In modeling Common Business Objects and Data Models, a flexible and extensible XML Schema representation is a must. What are three recommended approaches in XML Schema design to enable a flexible SOA implementation? (Choose three.)
A. use choices
B. use type extensions
C. use substitution groups
D. use one global namespace
Answer: A,B,C

16.In the following scenarios, all databases and messaging are XA-compliant. Which two scenarios are appropriately implemented as an XA transaction that includes all the steps in the scenario? (Choose two.)
A. a message containing an order is received, written to a database and then sent on for further processing
B. a message containing an order is received, matched with an existing database entry, and the entry is updated
C. a message containing an order is received, written to two databases, one physically remote with scheduled availability
D. a message containing an order is received, written to a database, and a request is sent for processing for which a response is required
Answer: A,B

17.Click the Exhibit button.

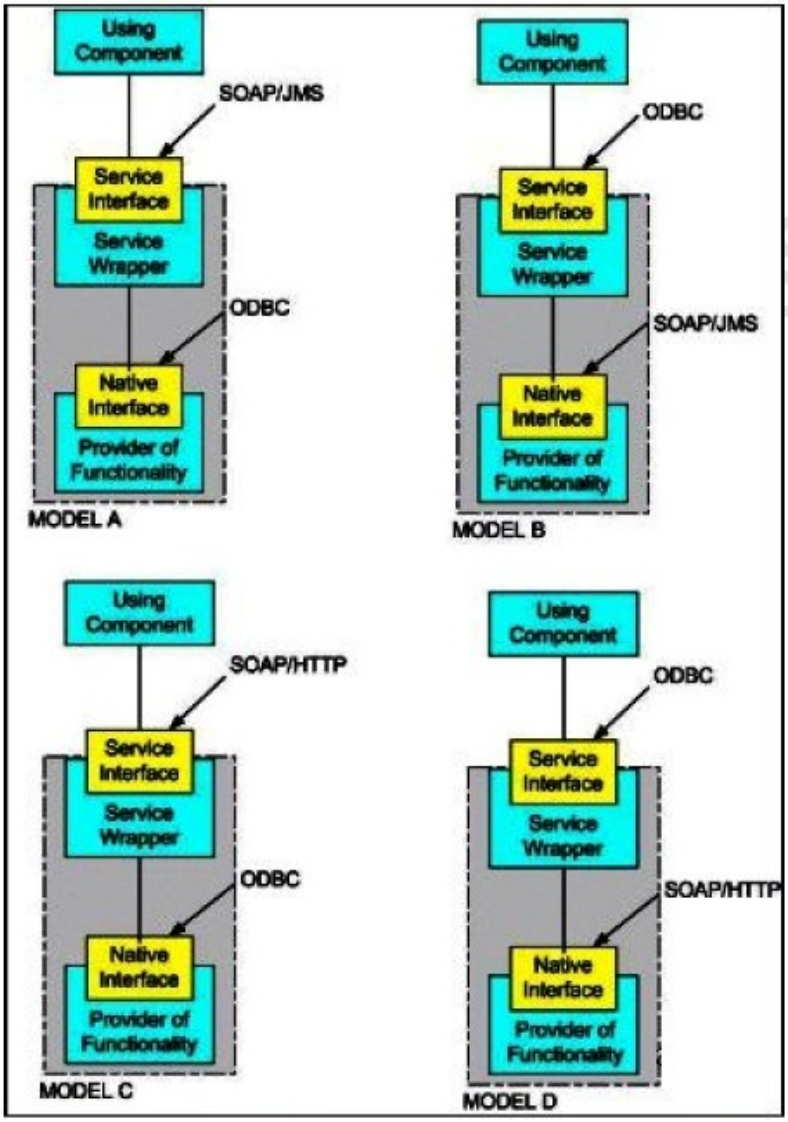

Which two diagrams represent appropriate SOAs? (Choose two.)
A. Model A
B. Model B

C. Model C
D. Model D
Answer: B,D

18.Which three statements are true about TIBCO EMS routing capability? (Choose three.)
A. Only global destinations can be routed.
B. Topics can be routed cyclically; queues cannot.
C. Two servers can both configure an active route to each other.
D. Queues cannot be routed more than one hop from the home queue server.
Answer: A,C,D

19.What are four important questions to consider when determining the appropriateness of a proposed service? (Choose four.)
A. Is the granularity appropriate?
B. Is the functionality appropriate for all utilizations?
C. Will the interface remain relatively stable over time?
D. Is a particular implementation technology appropriate?
E. Is the complexity of the underlying process appropriate?
F. Are the expected response times appropriate for the proposed use?
Answer: A,B,C,F

20.A bank has extremely sensitive records in a customer account system, which they need to make accessible via a Web Service to the enterprise. They want to expose this through an Enterprise Service Bus (ESB). They are concerned that the wrong person will be able to intercept or access the data. Which two approaches can be used to implement the security to ensure that the data is only view by an authorized person? (Choose two.)
A. use SSL with machine digital certificates between the client system and the ESB, and between the ESB and the account system
B. use WS-Security to encrypt sensitive fields that the ESB cannot decrypt, and use SAML tokens to identify the user to the account tracking system
C. use SSL with machine digital certificates between the client system and the ESB, and between the ESB and the account tracking system, and use a policy manager to provide access control
D. use WS-Security to encrypt the SOAP body to make sure all fields are encrypted all the way to the account tracking system, and use WS-Authorization to provide access control
Answer: B,D